MULTITEL
SINCE 1911



MX250

	25,30 m		23,30 m		8,20 m (250 kg) 12,20 m (80 kg)
	250 kg		1,40x0,70x1,10 m		90°+90°
	400°		EX Stabilizzatori a estensione laterale idraulica Stabs par vérins extensibles hydrauliquement Laterally extensible hydraulic stabilizers H-Abstützung		3,5 t

www.multitelgroup.com

MX250

IRONIKA

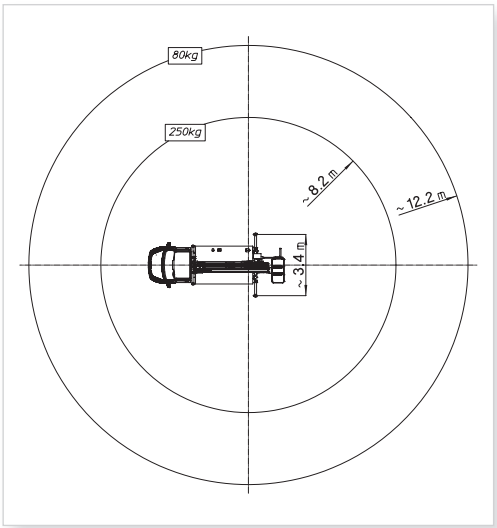

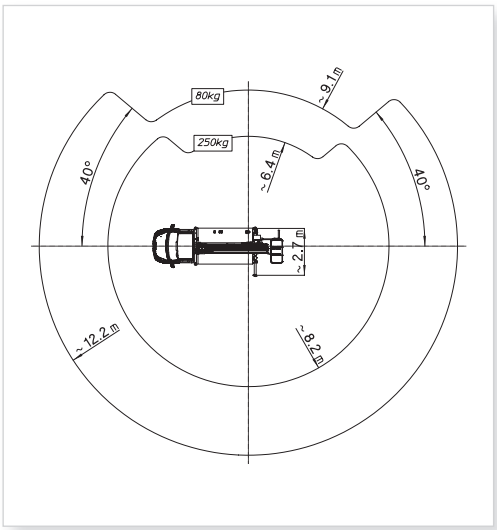

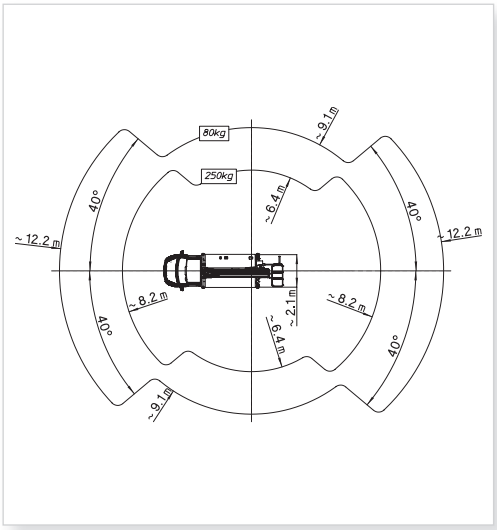

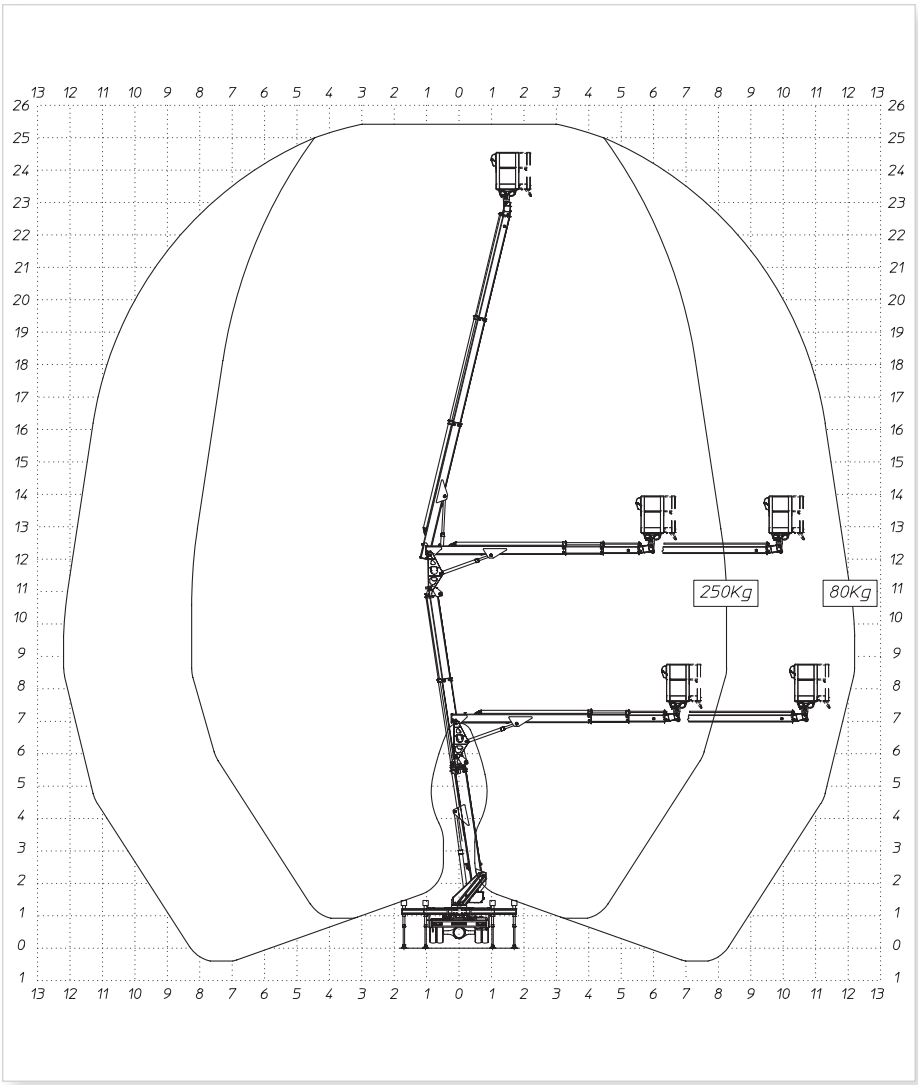

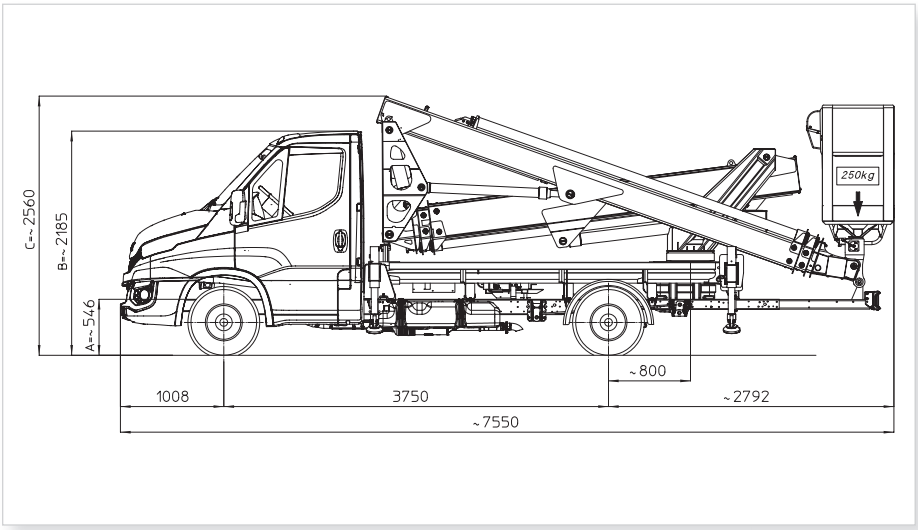

MULTITEL PAGLIERO S.P.A.
Strada Statale, 114
12030 MANTA (CN) - ITALY
Tel. +39 0175 255211- Fax +39 0175 255255
info@pagliero.com

Filiali
Corso Piemonte, 54
10099 S.MAURO T.SE (TO) - ITALY
Tel. +39 011 2236792 - Fax +39 011 2236761

Via dell'Offelera, 106
20861 BRUGHERIO (MB) - ITALY
Tel. +39 039 883393/4 - Fax +39 039 2872140

MULTITEL INTERNATIONAL SAS
87, rue du Morellon
38070 ST. QUENTIN FALLAVIER - FRANCE
Tel. +33 (0)4 74 94 63 19 - Fax +33 (0)4 74 94 46 97
info@multitelinternational.com

MULTITEL EXPORT SALES GmbH
Carl-Zeiss-Straße, 34
52477 ALSDORF - DEUTSCHLAND
Tel. +49 (0) 2404 675 580 - Fax +49 (0) 2404 675 58 29
export@pagliero.com

MULTITEL UK Ltd
c/o Simmons Gainsford
7/10 Chandos Street, Cavendish Square - London W1G 9DQ
info.uk@pagliero.com

www.multitelgroup.com